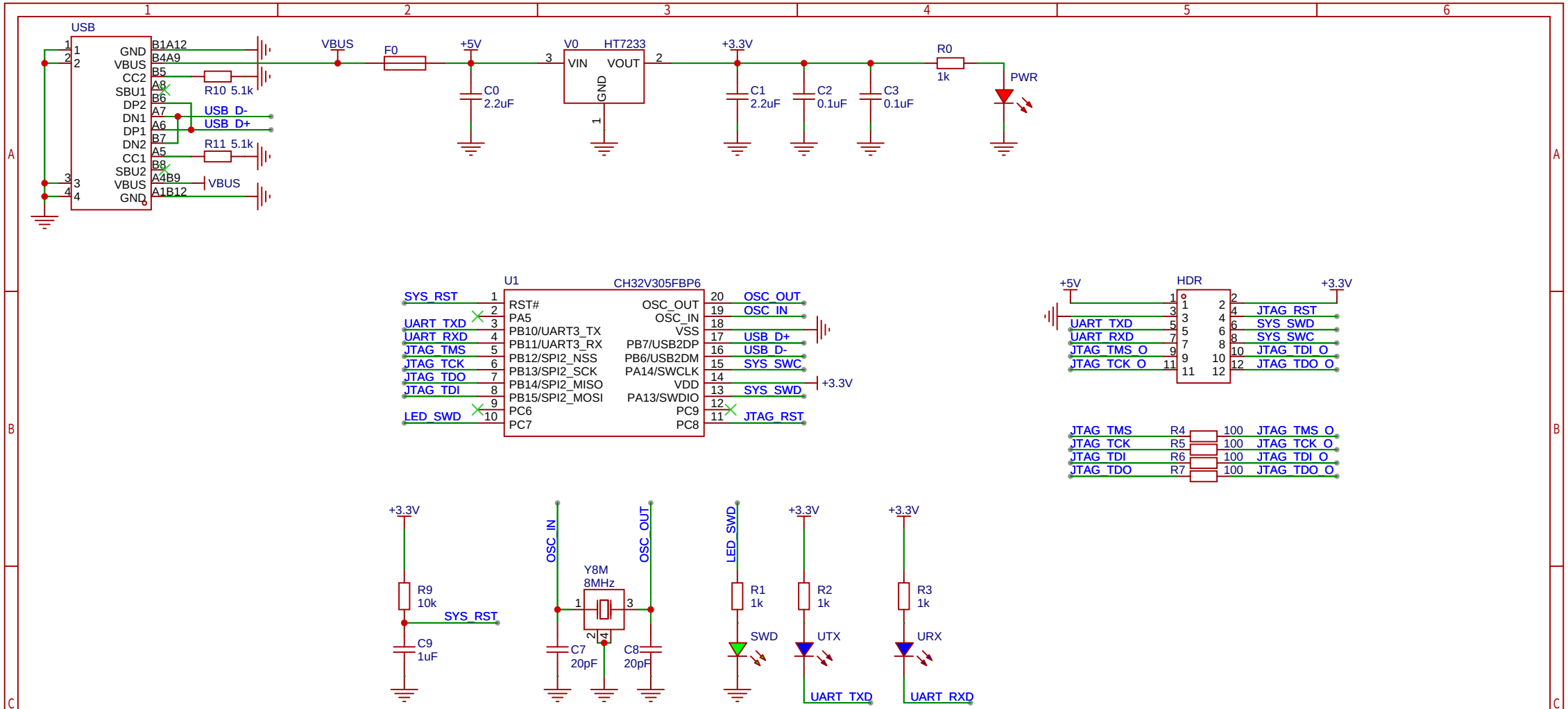

Schematic	DAPLink-HS	Update Date	2025-05-06
		Create Date	2023-05-25
Page	Core	Part Number	
Drawed		DAPLink-HS	
Reviewed			
		VER	SIZE	PAGE 1 OF 1
嘉立创EDA		V1.0	A4	嘉立创EDA